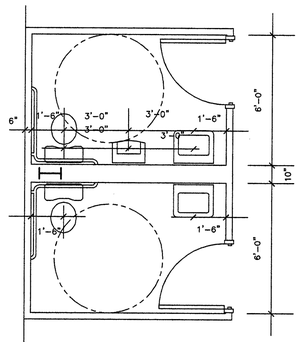

FUTURE SOUTHEND RESTROOM

NOTE: All dimensions are for rough framing.

FUTURE RESTROOM

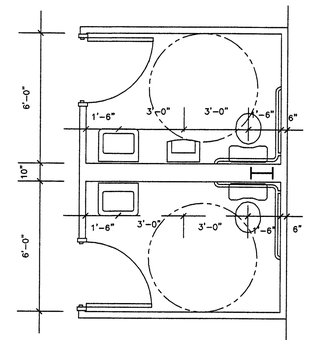

FUTURE NORTHEND RESTROOM

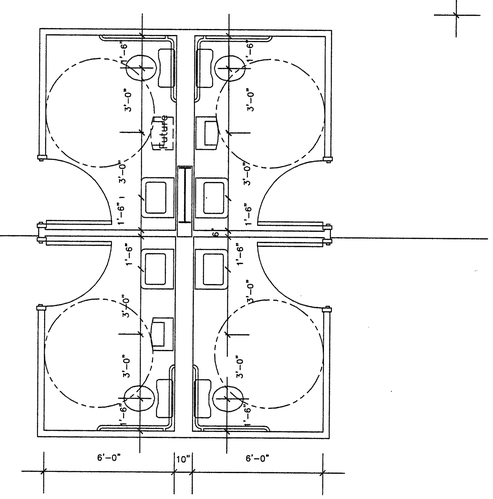

OFFICE RESTROOM

© 1999
LAWRENCE F. KAUFMAN, AIA
P.O. Box 2256
Olympia, WA 98507-2256
360.789.5975

MEMBER
AMERICAN INSTITUTE OF ARCHITECTS

7631
REGISTERED ARCHITECT
LAWRENCE F. KAUFMAN
STATE OF WASHINGTON

KAUFMAN DEVELOPMENT, L.P.
8009 RIVER DRIVE

CONSTRUCTION DOCUMENT

THIS DRAWING IS AN INSTRUMENT OF SERVICE, THE PROPERTY OF LAWRENCE F. KAUFMAN, AIA

USE OF THIS DOCUMENT IS LIMITED TO LAWRENCE F. KAUFMAN, AIA; THOSE UNDER CONTRACT WITH HIM, AND REVIEWING AGENCIES.

THESE DRAWINGS ARE NOT TO BE COPIED OR REPRODUCED WITHOUT HIS SIGNATURE IN RED BELOW.

THE INFORMATION ON THIS DOCUMENT IS NOT APPROVED FOR CONSTRUCTION UNTIL A BUILDING PERMIT HAS BEEN ISSUED AND THIS DRAWING HAS BEEN STAMPED "APPROVED FOR CONSTRUCTION".

8009 RIVER DR.

A-RR

RESTROOMS

6-6-2000

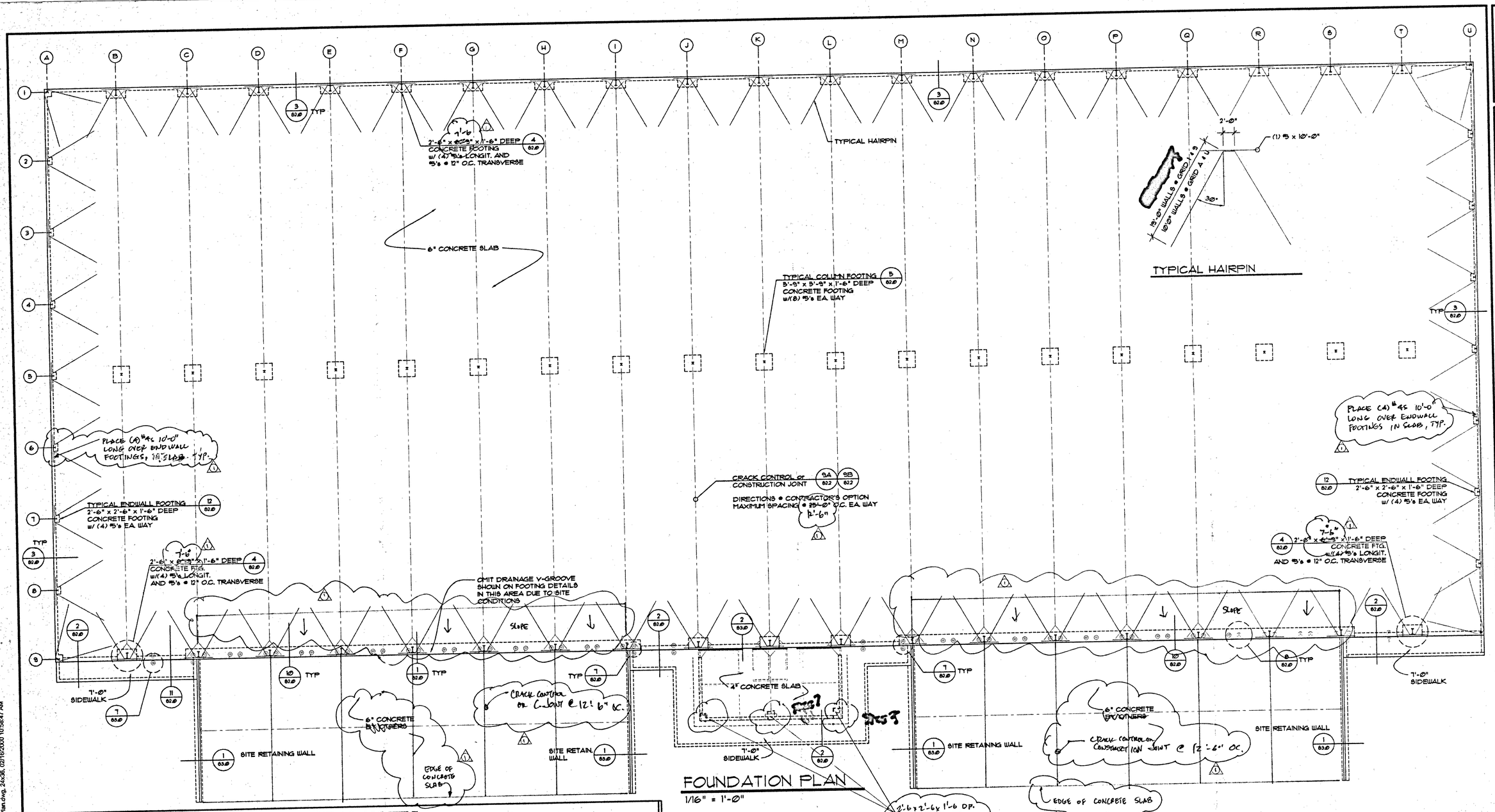

FOUNDATION PLAN

1/16" = 1'-0"

STRUCTURAL NOTES

General Notes:
These structural notes supplement the drawings. Any discrepancy found among the drawings, these notes, and the site conditions shall be reported to the Engineer, who shall correct such discrepancy in writing. Any work done by the Contractor after discovery of such discrepancy shall be done at the Contractor's risk.
The Contractor shall verify and coordinate the dimensions among all drawings prior to proceeding with any work or fabrication. The contractor shall coordinate between the metal building manufacture's drawings and the structural drawings. The metal building manufacture's dimensions are taken to be correct when in conflict with the structural drawings. The Contractor is responsible for all bracing and shoring during construction. All construction shall conform to the applicable portions of the latest edition of the Uniform Building Code except where noted.

Design Criteria:

1. LIVE LOAD = 25 PSF (Snow)
2. DEAD LOAD = 8 PSF (Roof)
   150 PCF (Concrete)
3. Wind = 1997 UBC Exposure B @ 80 mph
4. Earthquake = 1997 UBC, Zone III
5. Soil = 3000 PSF, Per Soils Report

Concrete & Reinforcing Steel:

1. All concrete work shall be per the 1997 UBC Chapter 19. Tolerances shall be per UBC Chapter 19, Section 07. Mixing, placement, and inspection shall be per Sections 03, 04, 05, 06.
2. All reinforcing shall be ASTM A615 Grade 60 except as shown on the plans.
3. Concrete shall be in accordance with ASTM 150.
   f'c = 2500 PSI @ 28 days.
   slump = ± 4" maximum, 6 % Air entrained

Steel:

1. The metal building manufacturer shall supply all structural steel framing (columns, beams, purlins, girts, wind columns, cross bracing, anchor bolts, base plates, etc.) required to construct the building.

CAUTION:
PLACE STEEL FRAMES PER METAL BUILDING MANUFACTURER'S RECOMMENDATIONS.
BRACE PER METAL BUILDING MANUFACTURER'S RECOMMENDATIONS.
CONTRACTOR TO FIELD VERIFY ALL CONDITIONS AND ALL ELEVATIONS.

VERIFY FOUNDATION DIMENSIONS WITH METAL BUILDING PLANS.
METAL BUILDING PLANS CONTROL OVER THIS SET OF PLANS.

NUMBER	REVISION	DATE
1	REACTIONS REVIEWED. MISC. UPDATES.	26 APR 00

NOTE TO CONTRACTOR

CONTRACTOR TO VERIFY COLUMN LOCATIONS WITH THE METAL BUILDING MANUFACTURER PRIOR TO CONSTRUCTION. DO NOT BEGIN CONSTRUCTION WITHOUT APPROVAL OF ENGINEER IN WRITING

MARK J. LEINGANG — STATE OF MONTANA — 13424 — REGISTERED PROFESSIONAL ENGINEER — EXPIRES 5/31/01

DRAWING TITLE: FOUNDATION PLAN

JOB TITLE: 8009 RIVER DRIVE

STRUCTURAL * FOUNDATION *CIVIL ENGINEERING
1235 EAST 4TH AVE.
SUITE 101
OLYMPIA, WA 98506
(360) 754-9339
MC SQUARED INCORPORATED

DESIGN BY: MJL
DRAWN BY: WJC
DATE: 1-14-00
SCALE: AS-SHOWN
JOB NO. 20013
SHEET NO. S1.0

M:\PROJECTS\Kaufman Bros\20013 - Deschutes Indust Park\Structural\S010 - Foundation Plan.dwg, 24x36, 02/16/2000 10:58:47 AM

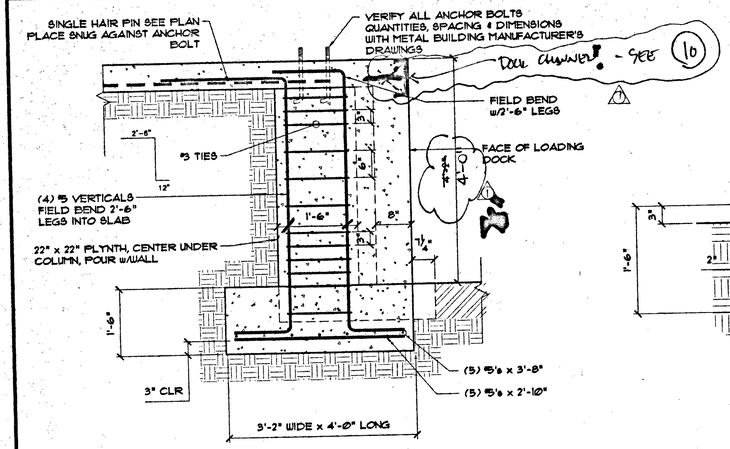

1 MAIN FOOTING @ RETAINING WALL SECTION
N.T.S.

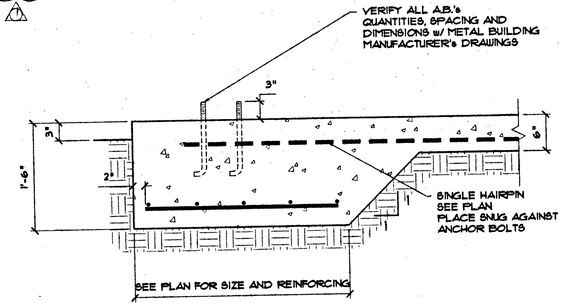

4 MAINFRAME FOOTING SECTION
1" = 1'-0"

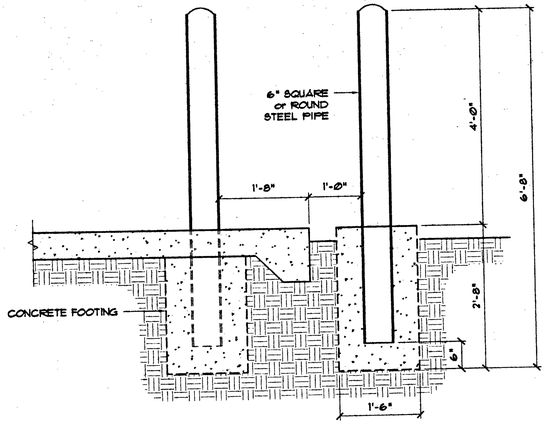

7 PIPE BOLLARD SECTION
3/4" = 1'-0"

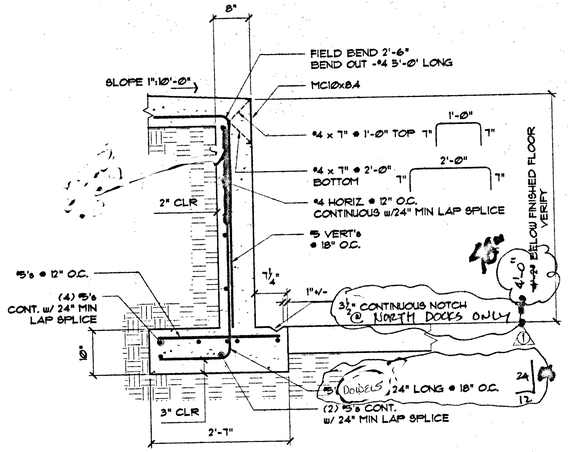

10 LOADING DOCK WALL SECTION
N.T.S.

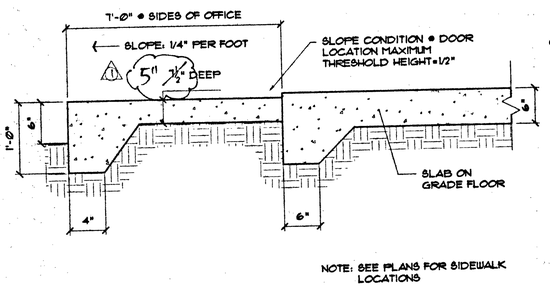

2 SIDEWALK SECTION
1" = 1'-0"

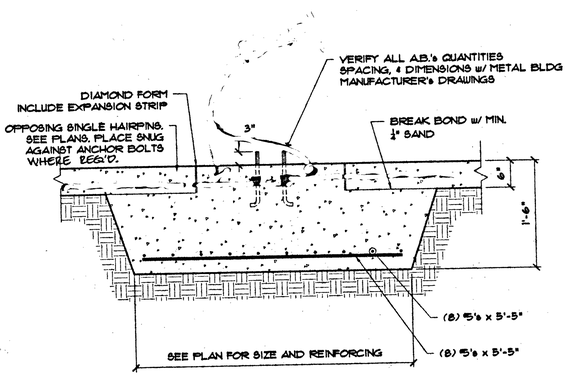

5 INTERMEDIATE FOOTING SECTION
3/4" = 1'-0"

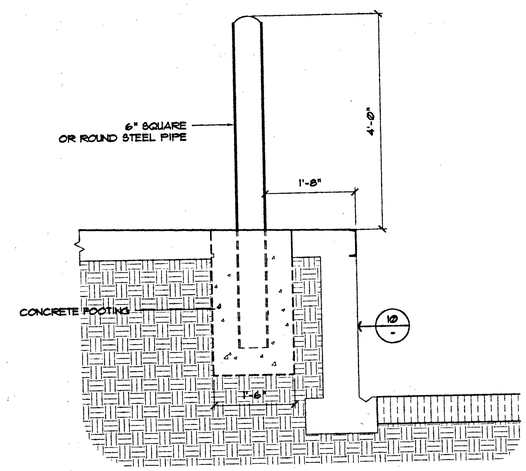

8 PIPE BOLLARD @ DOCK SECTION
3/4" = 1'-0"

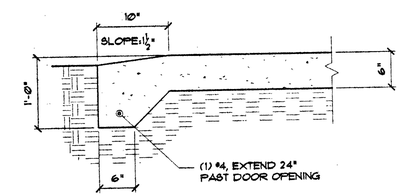

11 OVERHEAD DOOR EDGE SECTION
1" = 1'-0"

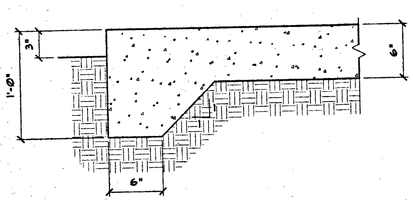

3 MONOLITHIC THICKENED EDGE
1 1/2" = 1'-0"

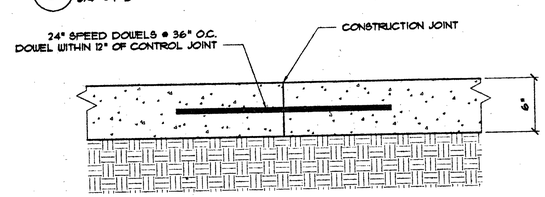

9A CONSTRUCTION JOINT SECTION
1 1/2" = 1'-0"

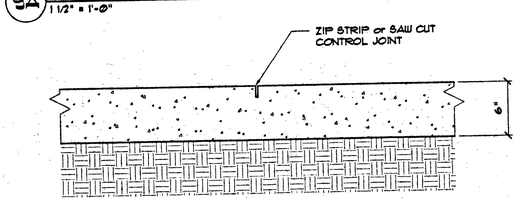

9B CONTROL JOINT SECTION
1 1/2" = 1'-0"

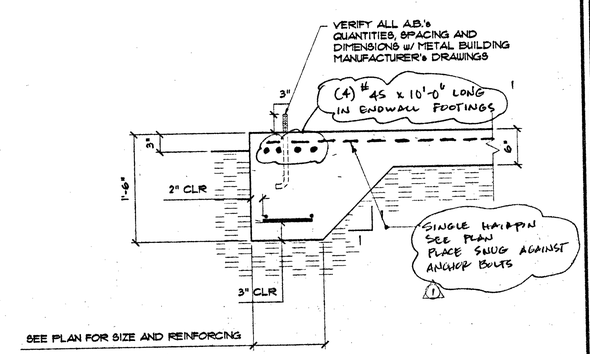

12 ENDWALL FOOTING SECTION
N.T.S.

NUMBER	REVISION	DATE
1	REACTIONS REVIEWED. MISC. UPDATES	26 APR 00

STATE OF WASHINGTON MARK J. LEANDER 23424 REGISTERED PROFESSIONAL ENGINEER
EXPIRES 5/31/01

DRAWING TITLE
FOOTING DETAILS

JOB TITLE
8009 RIVER DRIVE

STRUCTURAL • FOUNDATION • CIVIL ENGINEERING
1235 EAST 4TH AVE.
SUITE 101
OLYMPIA, WA 98506
(360) 754-9339
MC SQUARED INCORPORATED

DESIGN BY	MJL
DRAWN BY	WJC
DATE	1-14-00
SCALE	AS-SHOWN
JOB NO.	20013
SHEET NO.	S2.0

M:\PROJECTS\Kaufman Bros\20013 - Deschutes Indust Park\Structural\S020 - Details.dwg, 24x36, 02/16/2000 09:43:48 AM

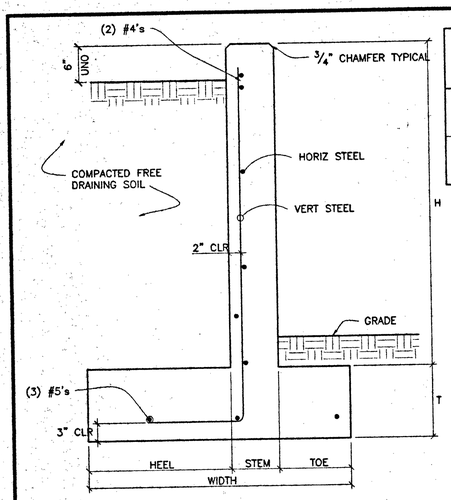

H	T	STEM	TOE	WIDTH	VERT STEEL	HORIZ STEEL	TOP HORIZ STEEL	BOTTOM HORIZ STEEL
4'-8"	9"	8"	2"	2'-4"	#5 @ 18"	#5 @ 18"	—	USE DOWEL TAILS I.E. #5 @ 18"

NOTES:

1) REFER TO CIVIL DRAWINGS FOR ELEVATIONS OF ADJACENT GRADES
2) COMPACT BACKFILL TO 95% ASTM D-1557 UNLESS NOTED OTHERWISE
3) PROVIDE 12" MIN THICKNESS OF FREE DRAINING BACKFILL MATERIAL BEHIND WALL.
4) CONCRETE: 2500 PSI @ 28 DAYS
5) STEEL: GRADE 60, 24" MIN LAP SPLICES.

1 RETAINWALL DETAIL
1" = 1'-0"

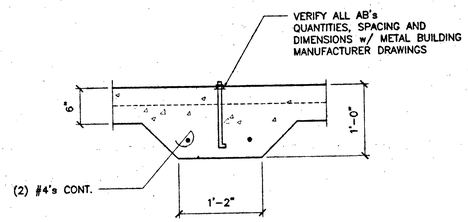

2 FOOTING DETAIL
1" = 1'-0"

DRAWING TITLE
FOOTING DETAILS

JOB TITLE
8009 RIVER DRIVE

STRUCTURAL * FOUNDATION * CIVIL ENGINEERING
1235 EAST 4TH AVE.
SUITE 101
OLYMPIA, WA 98506
(360) 754-9339
MC SQUARED INCORPORATED

DESIGN BY	MJL
DRAWN BY	WJC
DATE	1-14-00
SCALE	AS-SHOWN
JOB NO.	20013
SHEET NO.	S3.0

M:\PROJECTS\Kaufman Bros\20013 - Deschutes Indust Park\Structural\S030 - Details.dwg, 24x36, 02/16/2000 09:44:51 AM

WALL TYPE LEGEND

1	600XC20 STUDS @ 16" O.C. 5/8" GWB ONE SIDE	6" BEARING WALL, GWB ONE SIDE
2	600XC20 STUDS @ 16" O.C. 5/8" GWB ONE SIDE	6" NON-BEARING WALL, GWB ONE SIDE, R-19 INSULATION, TYVEK, METAL WALL PANELS ON EXTERIOR
3	600XC20 STUDS @ 16" O.C. 5/8" GWB TWO SIDES	6" BEARING WALL, GWB TWO SIDES
4	600XC20 STUDS @ 16" O.C. 5/8" GWB TWO SIDES	6" NON-BEARING WALL, GWB TWO SIDES
5	350WC20 STUDS @ 16" O.C. 5/8" GWB TWO SIDES	3 1/2" BEARING WALL, GWB TWO SIDES
6	350WC20 STUDS @ 24" O.C. 5/8" GWB TWO SIDES	3 1/2" NON-BEARING WALL, GWB TWO SIDES
7	(2) 350WC20 STUDS @ 16" O.C. W/ 3" CAVITY SPACE 5/8" GWB TWO SIDES	10" PLUMBING WALL, GWB TWO SIDES
8	600XC20 STUDS @ 12" O.C. (2) LAYERS 5/8" GWB EACH SIDE	6" FIREWALL 2 LAYERS GWB EACH SIDE
9	600XC18 STUDS @ 12" O.C. 5/8" GWB TWO SIDES	6" BEARING WALL, GWB TWO SIDES
10		

HEADER LEGEND

A. (2) 1200 EJ16 JOISTS BACKTOBACK
W/ (3) CRIPPLE STUDS & (2) KING STUDS @ EACH END OF
WINDOWS OR DOORS OVER 6'-0" WIDE
SEE LOAD BEARING HEADER ON METAL STUD DETAIL SHEET

B. (2) 1200 EJ16 JOISTS BACKTOBACK
W/ (2) CRIPPLE STUDS AND (1) KING STUD @ EACH END OF
WINDOWS OR DOORS UNDER 6'-0" WIDE
SEE LOAD BEARING HEADER ON METAL STUD DETAIL SHEET

C. SEE NON-LOAD BEARING HEADER ON METAL STUD DETAIL SHEET FOR ALL HEADERS OVER WINDOWS OR DOORS IN NON-LOAD BEARING WALLS

D.

E.

SECTION TYPE

XC = C-STUD

SU = CHANNEL STUD

EJ = JOIST

DT = TRACK

BRACING LEGEND

A — (1) 2" X 20 GA STRAP CROSS BRACING
MAXIMUM RUN @ EACH LOCATION = 112 INCHES

B — (2) 2" X 20 GA STRAP CROSS BRACING
MAXIMUM RUN @ EACH LOCATION = 112 INCHES

C — (1) 20 GA FLAT METAL BRACING, 2" WIDE

(1) 1/4" X 1 1/2" RAWL NAILIN @ 32" O.C. MAXIMUM AND 6" MINIMUM FROM EACH DOOR AND WINDOW JAMB.

(1) LATERAL BRACING (INTERIOR PARTION WALL)

INDENTIFICATION CODE

EXAMPLE: 350XC16

350: 3 1/2" STUD

XC: STYLE (1 5/8" FLANGE)

EJ: STYLE (2" FLANGE)

16: 16 GAUGE

FRAMING NOTES

FLOOR JOISTS TO BE (1) 1200EJ16 W/ 2" FLANGE @ 16" O.C. PLACED OVER A LOAD BEARING STUD

ALL INTERIOR NON-BEARING WALL MAY BE FRAMED W/ 3 1/2" STUDS @ 24" O.C.

ALL INTERIOR NON-BEARING WALLS SHALL BE BRACED AT THE LATCH SIDE OF THE DOORS WITH STUD OR TRACK BRACING

SHEAR WALL TO BE BRACED WITH BANDING FASTENED AT EACH STUD W/ #10 TEK

BEARING DOOR HEADERS TO BE FRAMED WITH (2) 600 XC20 CRIPPLES AND (1) KING STUDS AT EACH SIDE OF HEADER. HEADER TO BE (2) 1200 EJ16 BACK-TO-BACK. HEADER TO BE 44 3/4" LONG.

BATHROOM WALL TO BE DOUBLE-FRAMED OUT OF (2) 350 XC20 STUDS WITH A 3 INCH CAVITY SPACE BETWEEN.

THIS INFORMATION IS INTENDED TO PROVIDE THE CONTRACTOR GUIDANCE ON THE CONSTRUCTION OF THE METAL STUD SYSTEMS IN THIS PRE-ENGINEERED METAL BUILDING.

THIS INFORMATION REPRESENTS THE METHODS AND PRACTICES KNOWN BY THE ARCHITECT BUT IS NOT INTENDED TO RESTRICT OR EXCLUDE OTHER CONSTRUCTION OR DESIGN TECHNIQUES.

FOR TECHNICAL DATA AND DETAILS REFER TO THE FOLLOWING PUBLICATIONS;

AISI RESIDENTIAL STEEL FRAMING MANUAL

RESIDENTIAL STEEL DESIGN AND CONSTRUCTION BY John H. Hacker and Julie A. Gorges

AISI PUBLICATION RG-934, LOW-RISE RESIDENTIAL CONSTRUCTION DETAILS

AISI PUBLICATION RG-933, FASTENERS FOR RESIDENTIAL STEEL FRAMING

MSMA PUBLICATION ICBO ER NO. 4943

STEELER ICBO ES REPORT NO. 4389P

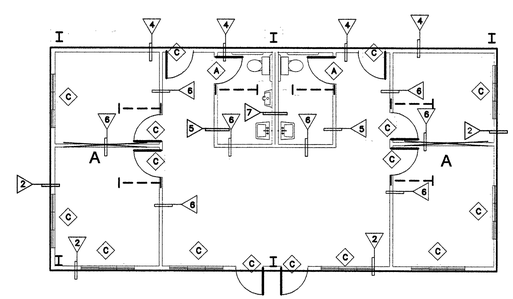

LIGHT GAGE FRAMING PLAN

ACTUAL WALL LOCATIONS MAY CHANGE
CONTACT THE ARCHITECT WITH ALL CHANGES TO THIS PLAN
ADHERE TO THIS DESIGN CONCEPT

© 2000
LAWRENCE F. KAUFMAN, AIA
P.O. Box 2256
Olympia, WA 98507-2256
1.360.481.8088

7631 REGISTERED ARCHITECT
LAWRENCE F. KAUFMAN
STATE OF WASHINGTON

KAUFMAN DEVELOPMENT, L.P.
8009 RIVER DRIVE

DESIGN DEVELOPMENT DOCUMENT

THIS DRAWING IS AN INSTRUMENT OF SERVICE AND THE PROPERTY OF LAWRENCE F. KAUFMAN, AIA.

USE OF THESE DOCUMENTS IS RESTRICTED TO LAWRENCE F. KAUFMAN, AIA, THOSE UNDER CONTRACT WITH HIM AND REVIEWING AGENCIES.

THESE DRAWINGS ARE NOT TO BE COPIED OR REPRODUCED WITHOUT HIS SIGNATURE IN RED BELOW.

THE INFORMATION ON THIS DOCUMENT IS NOT APPROVED FOR CONSTRUCTION UNTIL A BUILDING PERMIT HAS BEEN ISSUED AND THE DRAWING HAS BEEN STAMPED "CONSTRUCTION DOCUMENT".

8009 RIVER DRIVE

S.LGP

L G FRAMING PLAN

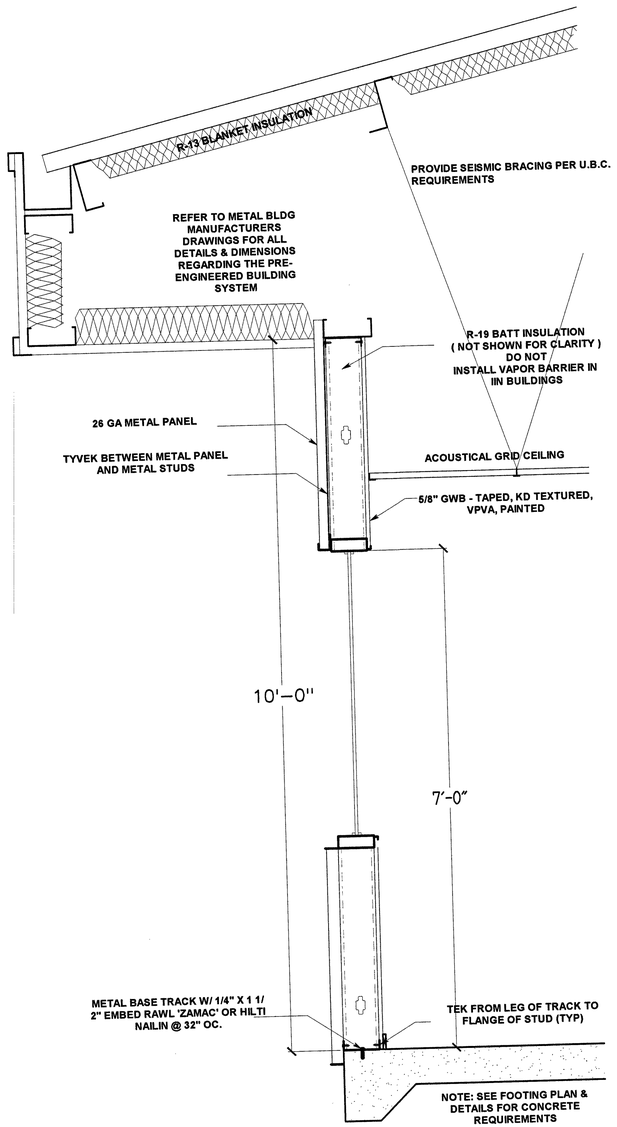

EXTERIOR SECTION

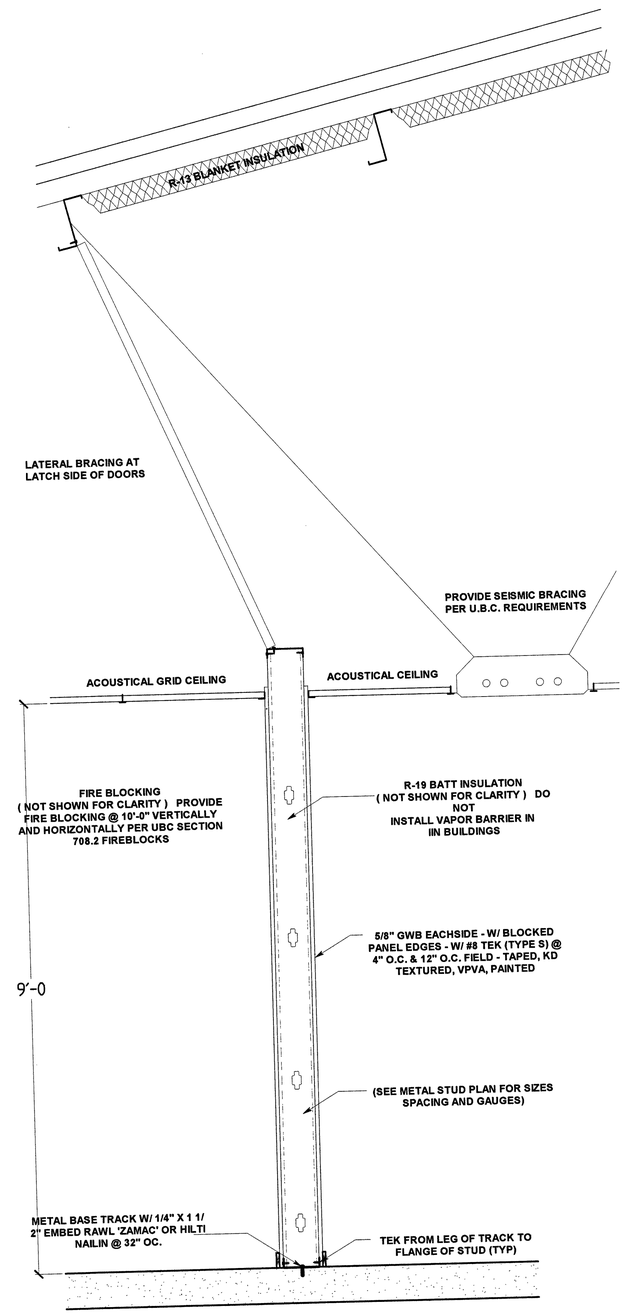

NON-BEARING STUD WALL SECTION

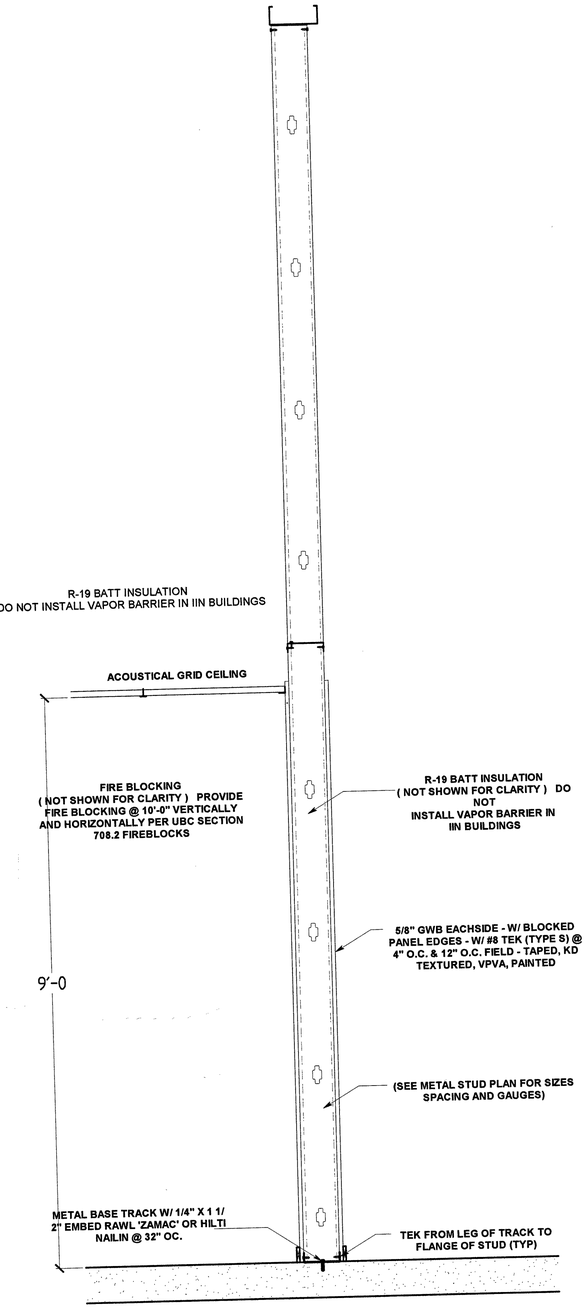

NON-BEARING STUD WALL SECTION @ WAREHOUSE WALL LINE

2000
LAWRENCE F. KAUFMAN, AIA
P.O. Box 2256
Olympia, WA 98507-2256
1.360.481.8088

7631 REGISTERED ARCHITECT
LAWRENCE F. KAUFMAN
STATE OF WASHINGTON

KAUFMAN DEVELOPMENT, L.P.
8009 RIVER DRIVE

CONSTRUCTION DOCUMENT

THIS DRAWING IS AN INSTRUMENT OF SERVICE AND THE PROPERTY OF LAWRENCE F. KAUFMAN, AIA.

USE OF THESE DOCUMENTS IS RESTRICTED TO LAWRENCE F. KAUFMAN, AIA, THOSE UNDER CONTRACT WITH HIM AND REVIEWING AGENCIES.

THESE DRAWINGS ARE NOT TO BE COPIED OR REPRODUCED WITHOUT HIS SIGNATURE IN RED BELOW.

THE INFORMATION ON THIS DOCUMENT IS NOT APPROVED FOR CONSTRUCTION UNTIL A BUILDING PERMIT HAS BEEN ISSUED AND THIS DRAWING HAS BEEN STAMPED - CONSTRUCTION DOCUMENT -

8009 RIVER DRIVE

S.LGS

LIGHT GAGE SECTIONS

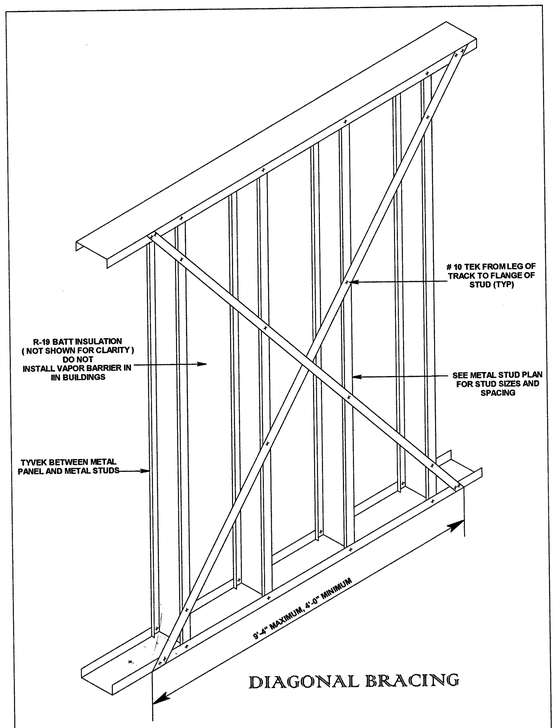

DIAGONAL BRACING

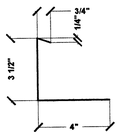

DECK EDGE ANGLE DETAIL

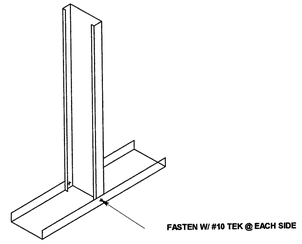

TRACK TO STUD CONNECTION

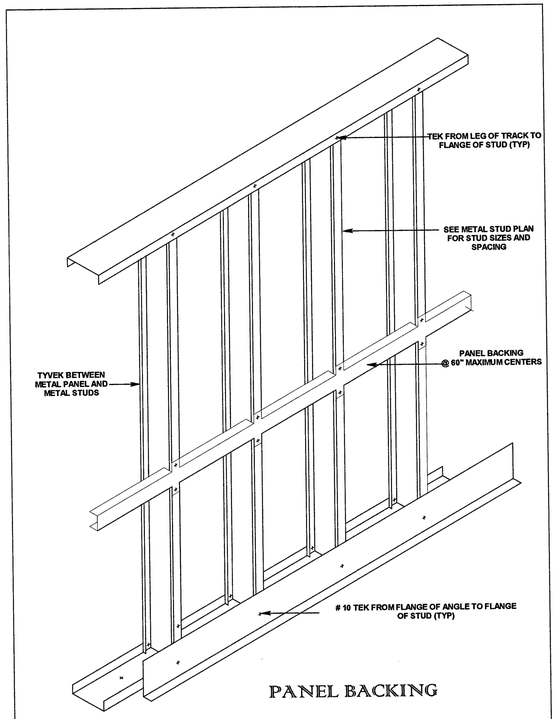

PANEL BACKING

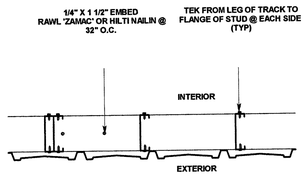

STUD/FASTENER PLACEMENT IN STUD TRACK

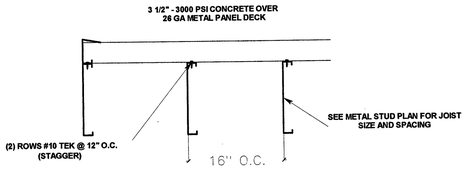

JOIST/FASTENER PLACEMENT AT DECK

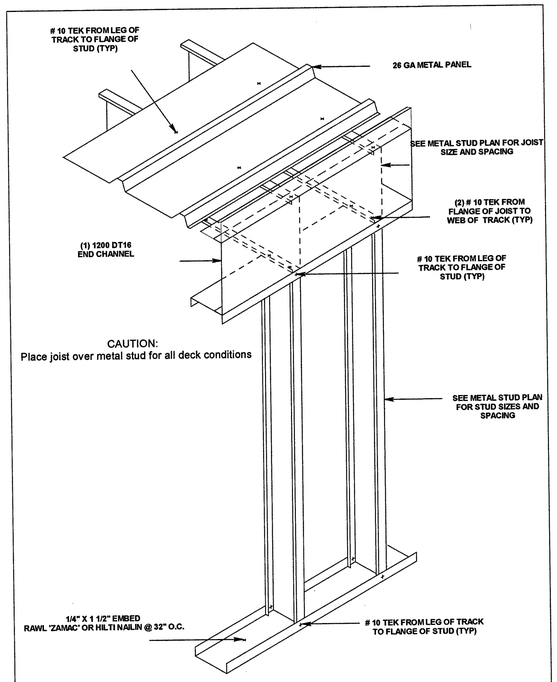

DECK DETAIL

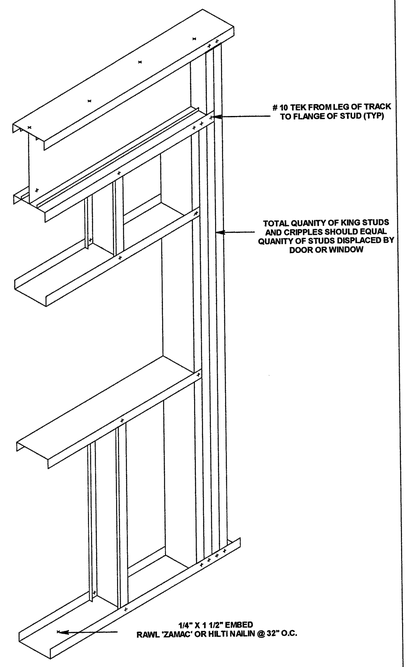

'A' BEARING STUD WALL HEADER
@ Doors & Windows over 6'-0" wide

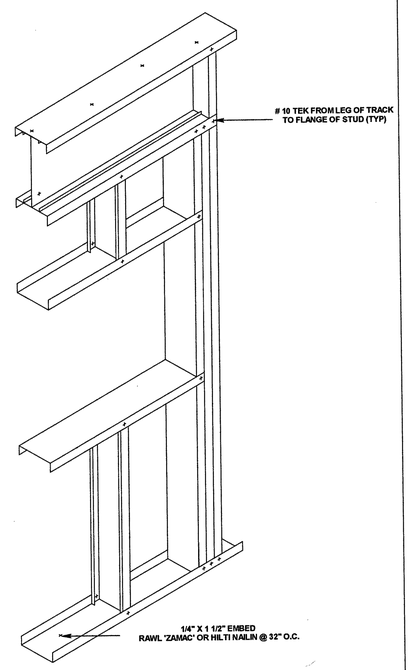

'B' BEARING STUD WALL HEADER
@ Doors & Windows under 6'-0" wide

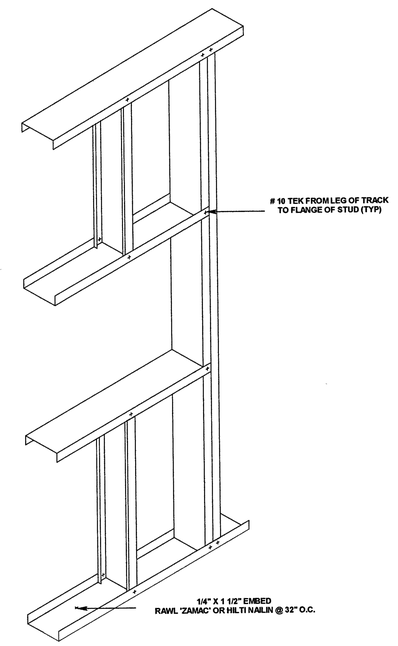

'C' NON-BEARING STUD WALL HEADER

© 2000
LAWRENCE F. KAUFMAN, AIA
P.O. Box 3266
Olympia, WA 98507-3266
1.360.491.6988

7631 REGISTERED ARCHITECT
LAWRENCE F. KAUFMAN
STATE OF WASHINGTON

KAUFMAN DEVELOPMENT, L.P.
8009 RIVER DRIVE

DESIGN DEVELOPMENT DOCUMENT

THIS DRAWING IS AN INSTRUMENT OF SERVICE AND THE PROPERTY OF LAWRENCE F. KAUFMAN, AIA.

USE OF THESE DOCUMENTS IS RESTRICTED TO LAWRENCE F. KAUFMAN, AIA, THOSE UNDER CONTRACT WITH HIM AND REVIEWING AGENCIES.

THESE DRAWINGS ARE NOT TO BE COPIED OR REPRODUCED WITHOUT HIS SIGNATURE IN RED BELOW.

THE INFORMATION ON THIS DOCUMENT IS NOT APPROVED FOR CONSTRUCTION UNTIL THE ARCHITECT HAS ISSUED AND THIS DRAWING HAS BEEN STAMPED "CONSTRUCTION DOCUMENT".

8009 RIVER DRIVE

S.LGD

LIGHT GAGE DETAILS

GENERAL MECHANICAL NOTES

All thermostats used for both heating and cooling shall be capable of at least a 5°F deadband.
All thermostats are to be seven day programmable, micro-processor based.
All ductwork shall be constructed and sealed per SMACNA standards.
All ductwork shall be insulated per 1994 NREC by either lining or wrapping.
All ductwork shall be braced per UMC.
All refrigerant used shall be R-22.
All flues shall be located a minimum of 10' from outdoor intakes.

SEQUENCE OF OPERATION

F-1 & CU-1

Units to be controlled by space thermostat. System fan shall run continuously in occupied mode, and shall cycle in unoccupied mode.

EF-1&2

Fan shall run via line voltage switches. (by others)

UH-1,2,3,4,5, & 6

Unit heaters to be controlled by space thermostat.

MECHANICAL LEGEND

SYMBOL	DESCRIPTION
▶—	FIRE DAMPER
S/FD ▶—	COMBINATION SMOKE - FIRE DAMPER
⊠	CEILING EXHAUST FAN
M ▬	MOTORIZED DAMPER
⌋	MANUAL VOLUME DAMPER
▭	MOTORIZED ZONE DAMPER
⊠	SUPPLY - HARD CEILING
⊘	RETURN / EXHAUST - HARD CEILING
⊠	SUPPLY - SUSPENDED CEILING
⊘	RETURN / EXHAUST - SUSPENDED CEILING
(S)	TEMPERATURE SENSOR
(T)	THERMOSTAT
20X14	RECT. DUCT - SIDE SHOWN X SIDE NOT SHOWN
16" ø	ROUND DUCT
—	RECTANGULAR OR ROUND DUCT
20X14	RECTANGULAR LINED DUCT
	RECTANGULAR TRANSITION OR ROUND REDUCER
	SQUARE TO ROUND TRANSITION
—▷—	TRANSITION, REDUCER OR SQUARE TO ROUND
⊠	NEGATIVE GAUGE PRESSURE DUCT UP OR DOWN
⊠	POSITIVE GAUGE PRESSURE DUCT UP OR DOWN
—○—	DUCT UP OR DOWN

KEYED MECHANICAL NOTES

1. SIZE GAS PIPE PER UMC (TABLE 13-D).

FAN SCHEDULE

MARK	MAKE	MODEL	CFM	SP (IN H20)	HP OR BHP	FLOW CONTROL	SHT #	MCA (AMPS)	VOLTAGE VOLT - PHASE	COMMENTS
EF-1	BROAN	S-90	75	0.10	-	CONSTANT	M2.0	-	115-1	CEILING EXHAUST FAN
EF-2	BROAN	S-90	75	0.10	-	CONSTANT	M2.0	-	115-1	CEILING EXHAUST FAN

FURNANCE EQUIPMENT SCHEDULE

MARK	MAKE	MODEL	HEATING CAP INPUT - (BTU/H) - OUTPUT	CFM	EXT. SP IN. H20	OSA (CFM)	EFF'N'CY (AFUE)	VOLTAGE VOLT-PHASE	SHT #	WT	COMMENTS
F-1	CARRIER	58RAV095-16	92,000 - 75,000	1200	.5	300	80%	115-1PH	M2.0	146	HORIZONTAL FURNACE, MAX UNIT AMPS 10.2

CONDENSING UNIT EQUIPMENT SCHEDULE

MARK	MAKE	MODEL	COOLING CAP ARI (BTU/H)	REFRIGERANT (LBS)	SEER	MCA (AMPS)	MOCP (AMPS)	VOLTAGE VOLT-PHASE	SHT #	WT LBS	COMMENTS
CU-1	CARRIER	38CKC-036	33,800	5.00	10.0	18.4	25	208-3PH	M2.0	138	W/CK3BXA042 COIL

GAS UNIT HEATERS

MARK	MAKE	MODEL	HEATING CAP INPUT - (BTU/H) - OUTPUT	CFM	EFF'N'CY (AFUE)	VOLTAGE VOLT-PHASE	HP	SHT #	WT	COMMENTS
UH-1,2,3,4,5,6	ADP	SEP-400	390,000 - 312,000	4,400	80%	115-1PH	1/8 (2)	M3.0	285	HORIZONTAL FURNACE, MAX UNIT AMPS 4.2

GRD SCHEDULE

MARK	MAKE	MODEL	COMMENTS
CD-1	SHOEMAKER	700MA	LAY-IN MODULAR CEILING DIFFUSER
CD-2	SHOEMAKER	MA	SURFACE MOUNT CEILING DIFFUSER
RAG-1	SHOEMAKER	600-T	LAY-IN LATTICE RETURN AIR GRILLE

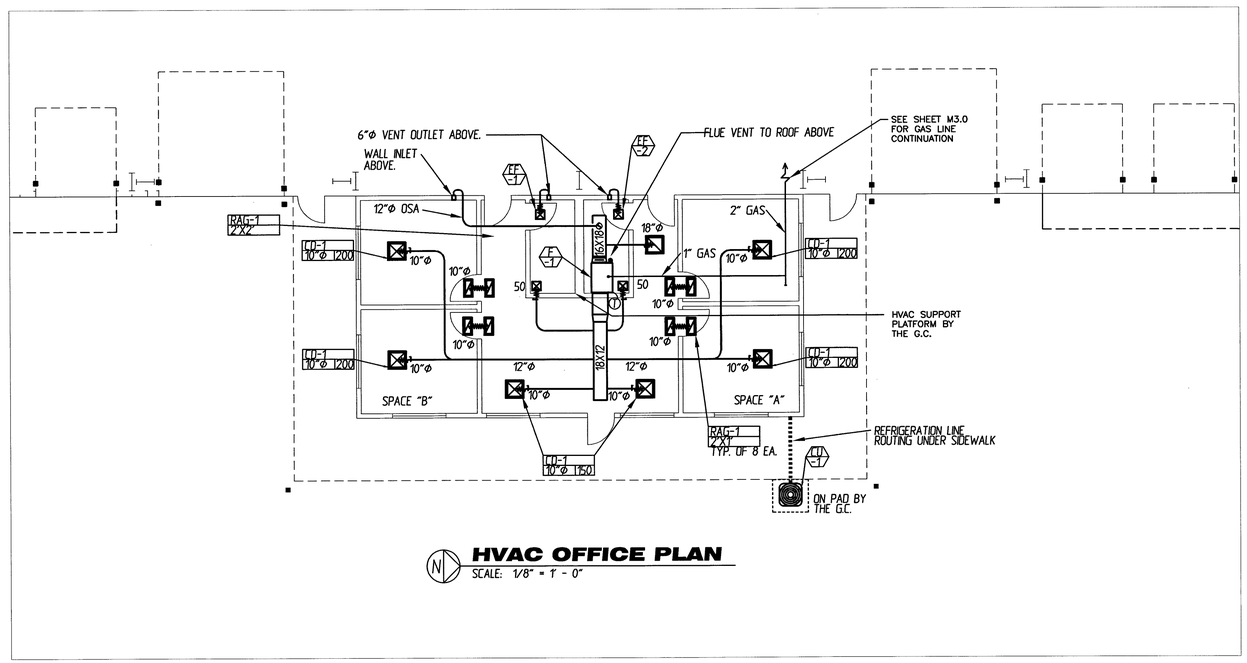

HVAC OFFICE PLAN
SCALE: 1/8" = 1' - 0"

GENERAL MECHANICAL NOTES / HVAC EQUIPMENT SCHEDULES
KAUFMAN DEVELOPMENT, L.P.

Sunset Air
INCORPORATED
HEATING & AIR CONDITIONING
5210 LACEY BLVD
LACEY, WA 98503
(360) 456-4956

DRAWN BY: JR

DATE: 06-28-00

7831 REGISTERED ARCHITECT
LAWRENCE F. KAUFMAN
STATE OF WASHINGTON

KAUFMAN DEVELOPMENT, L.P.
8009 RIVER DRIVE

SCHEMATIC DESIGN DOCUMENT

COPYRIGHT NOTICE

THIS LAYOUT/DESIGN IS AN UNPUBLISHED WORK, AND SUNSET AIR, INC. HEREBY RESERVES IT COMMON LAW RIGHT, PURSUANT TO TITLE 17 SECTION 2 OF THE U.S. CODE TO PREVENT ANY UNAUTHORIZED COPYING, PUBLICATION OR USE OF THIS DESIGN, AND TO OBTAIN DAMAGES THEREFORE.

THE INFORMATION ON THIS DOCUMENT IS NOT APPROVED FOR CONSTRUCTION UNTIL A PERMIT HAS BEEN ISSUED AND THIS DRAWING(S) HAS BEEN STAMPED "APPROVED FOR CONSTRUCTION"

8009 RIVER DRIVE

M1.0

HVAC SCHEDULES/DETAILS

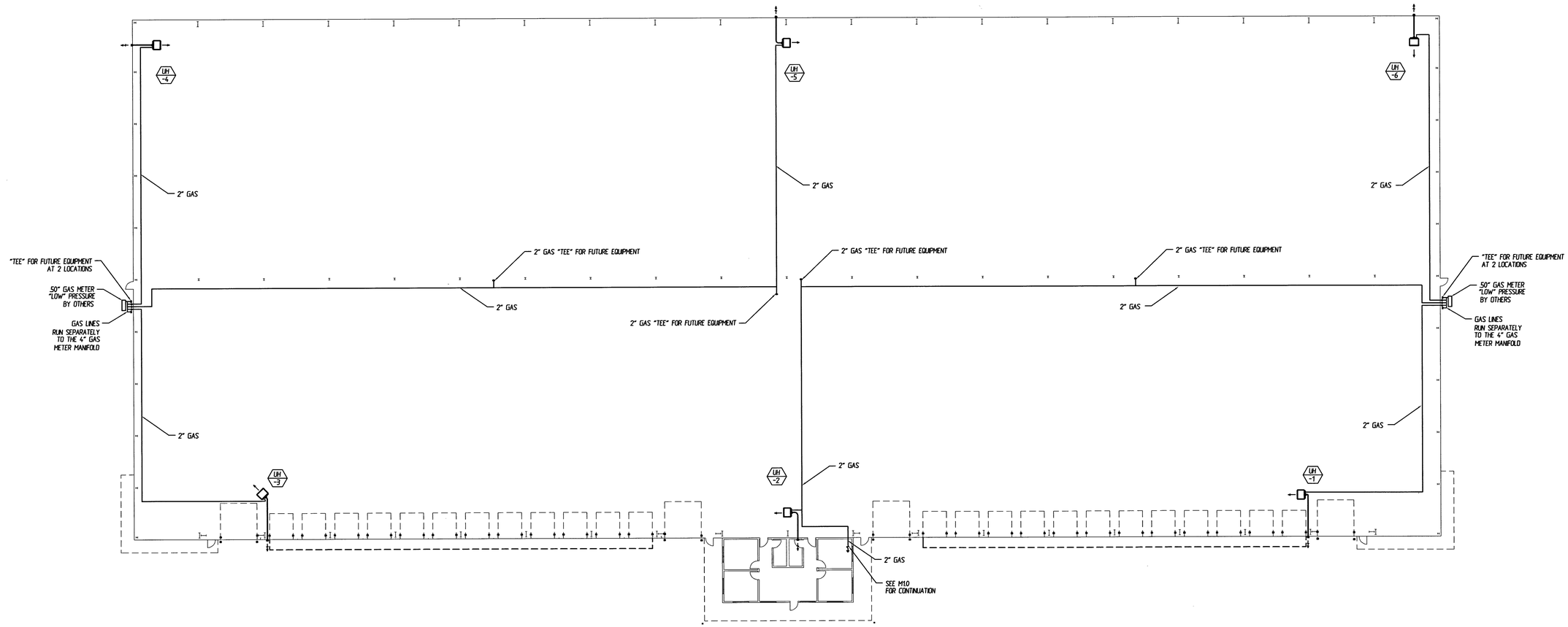

HVAC WAREHOUSE PLAN

SCALE: 1" = 20' - 0"

Sunset Air
INCORPORATED
HEATING & AIR CONDITIONING
8210 LACEY BLVD
LACEY, WA 98503
(360) 456-4966

DRAWN BY: JR

DATE: 06-28-00

7631
REGISTERED ARCHITECT
LAWRENCE F. KAUFMAN
STATE OF WASHINGTON

KAUFMAN DEVELOPMENT, L.P.
8009 RIVER DRIVE

SCHEMATIC DESIGN DOCUMENT

COPYRIGHT NOTICE

THIS LAYOUT/DESIGN IS AN UNPUBLISHED WORK, AND SUNSET AIR, INC. HEREBY RESERVES IT COMMON LAW RIGHT, PURSUANT TO TITLE 17 SECTION 2 OF THE U.S. CODE TO PREVENT ANY UNAUTHORIZED COPYING, PUBLICATION OR USE OF THIS DESIGN, AND TO OBTAIN DAMAGES THEREFORE.

THE INFORMATION ON THIS DOCUMENT IS NOT APPROVED FOR CONSTRUCTION UNTIL A PERMIT HAS BEEN ISSUED AND THIS DRAWING/S HAS BEEN STAMPED "APPROVED FOR CONSTRUCTION"

8009 RIVER DRIVE

M2.0

HVAC WAREHOUSE PLAN

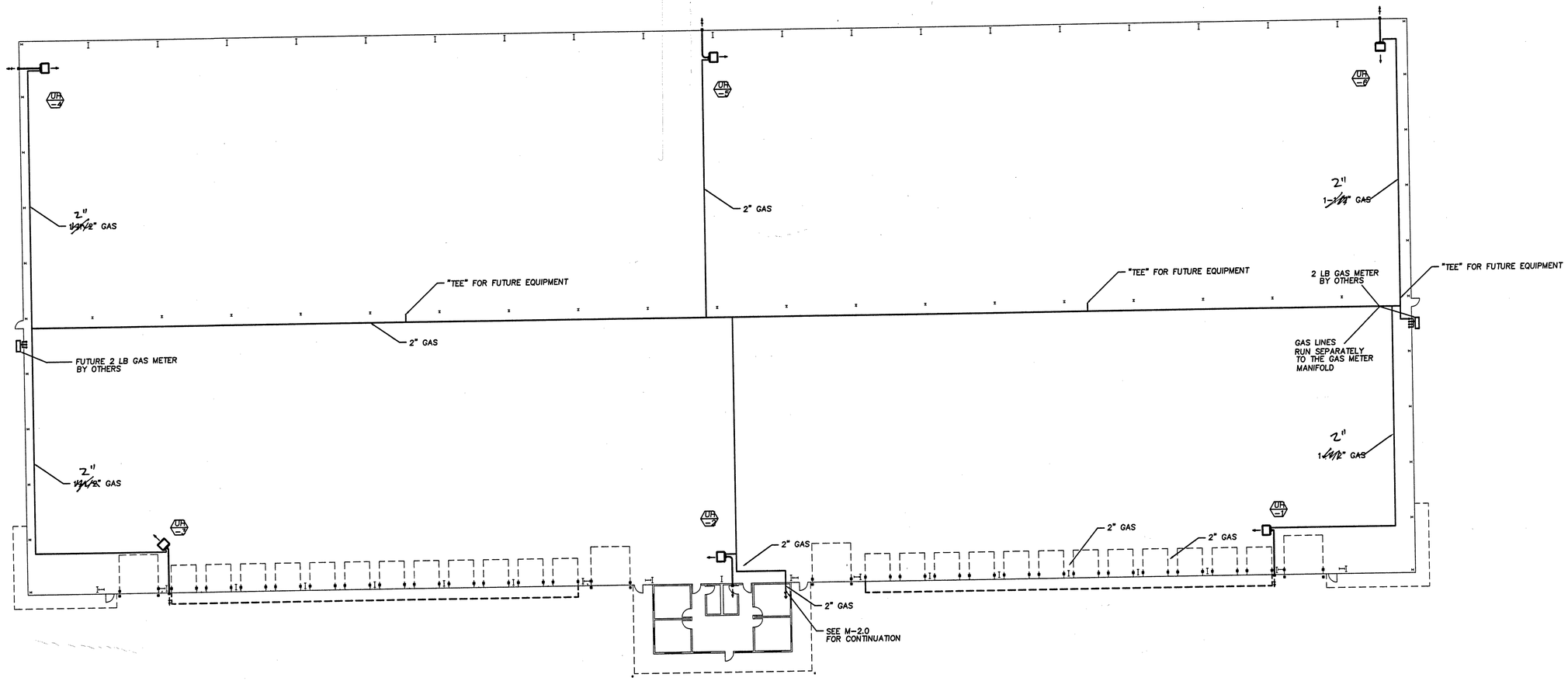

HVAC WAREHOUSE PLAN

SCALE: 1/16" = 1' - 0"

Apr 24,2000-6:43pm

Sunset Air
FIREPLACES
HEATING & AIR CONDITIONING
5210 LACEY BLVD
LACEY, WA 98503
(360) 456-4966

7631
REGISTERED ARCHITECT
LAWRENCE F. KAUFMAN
STATE OF WASHINGTON

KAUFMAN DEVELOPMENT, L.P.
8009 RIVER DRIVE

SCHEMATIC DESIGN DOCUMENT

COPYRIGHT NOTICE

THIS LAYOUT/DESIGN IS AN UNPUBLISHED WORK, AND SUNSET AIR, INC. HEREBY RESERVES IT COMMON LAW RIGHT, PURSUANT TO TITLE 17 SECTION 2 OF THE U.S. CODE TO PREVENT ANY UNAUTHORIZED COPYING, PUBLICATION OR USE OF THIS DESIGN, AND TO OBTAIN DAMAGES THEREFORE.

THE INFORMATION ON THIS DOCUMENT IS NOT APPROVED FOR CONSTRUCTION UNTIL A PERMIT HAS BEEN ISSUED AND THIS DRAWINGS HAS BEEN STAMPED "APPROVED FOR CONSTRUCTION"

8009 RIVER DRIVE

M3.0

HVAC WAREHOUSE PLAN